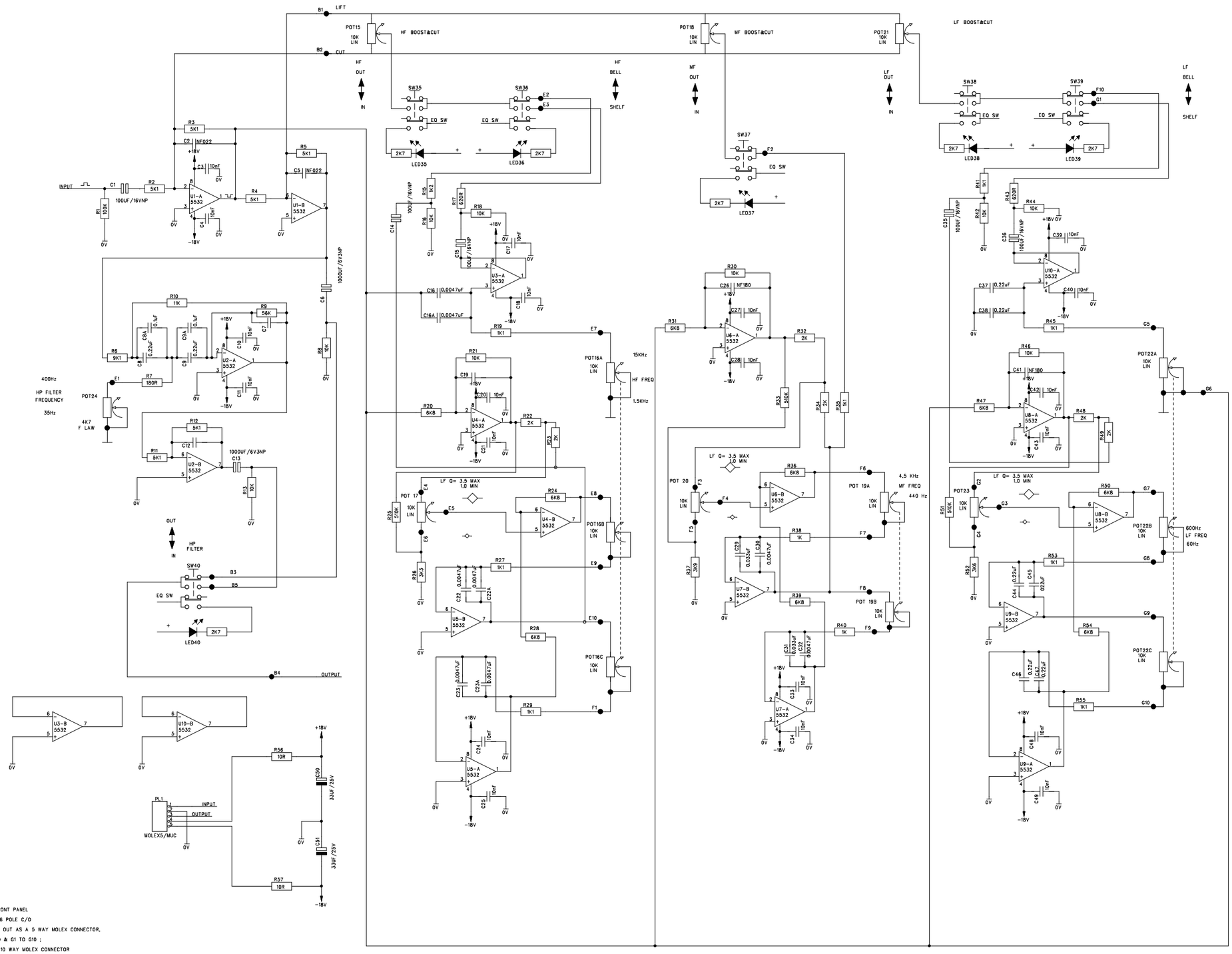

NOTE:

1. POTS MOUNTED ON FRONT PANEL
2. SWITCHES ARE ALPS 6 POLE C/O
3. B1 TO B5 TO BE SET OUT AS A 5 WAY MOLEX CONNECTOR.
4. E1 TO E10, F1 TO F10 & G1 TO G10 ;
   TO BE SET OUT AS 10 WAY MOLEX CONNECTOR
5. THE SWITCHES AND SOLDER PADS FOR THE POTS
   WILL BE DUPLICATED ON MODULE MOTHER BOARD.

REDRAWN IN POWER LOGIC

TITLE	DESIGNER	CG	DRG RS	DATE	DRG RS	DATE
EQUALIZER	DRAWN	TW	1	19.11.91 TW	5	
FOR	CHECKED	XX	2	02.01.92 SPD	6	
J-TYPE	APPROVED	XX	3		7	
	1st ISSUE		4		8	
© 1997 CADAC ELECTRONICS LTD	CADAC DRWG No. A1.6976					SHEET 1 OF 1